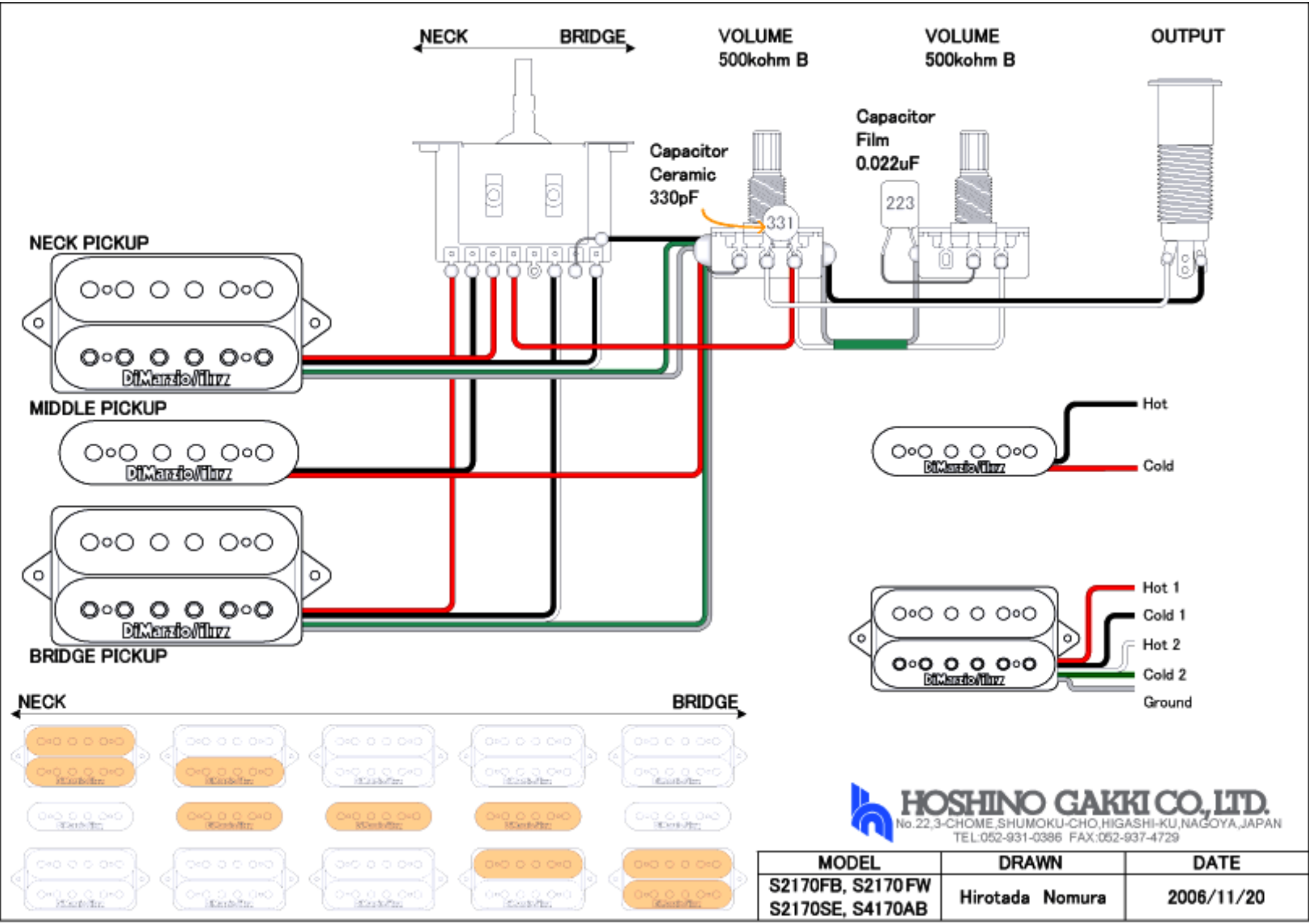

MODEL	DRAWN	DATE
S2170FB, S2170FW S2170SE, S4170AB	Hirotada Nomura	2006/11/20